MICRO SWITCH
FREEPORT, ILLINOIS, U.S.A.
A DIVISION OF HONEYWELL
FED. MFG. CODE 91929

SWITCH - TOGGLE (MAGNETIC HOLD-IN)

CATALOG LISTING
3TL55-7
FAA-PMA

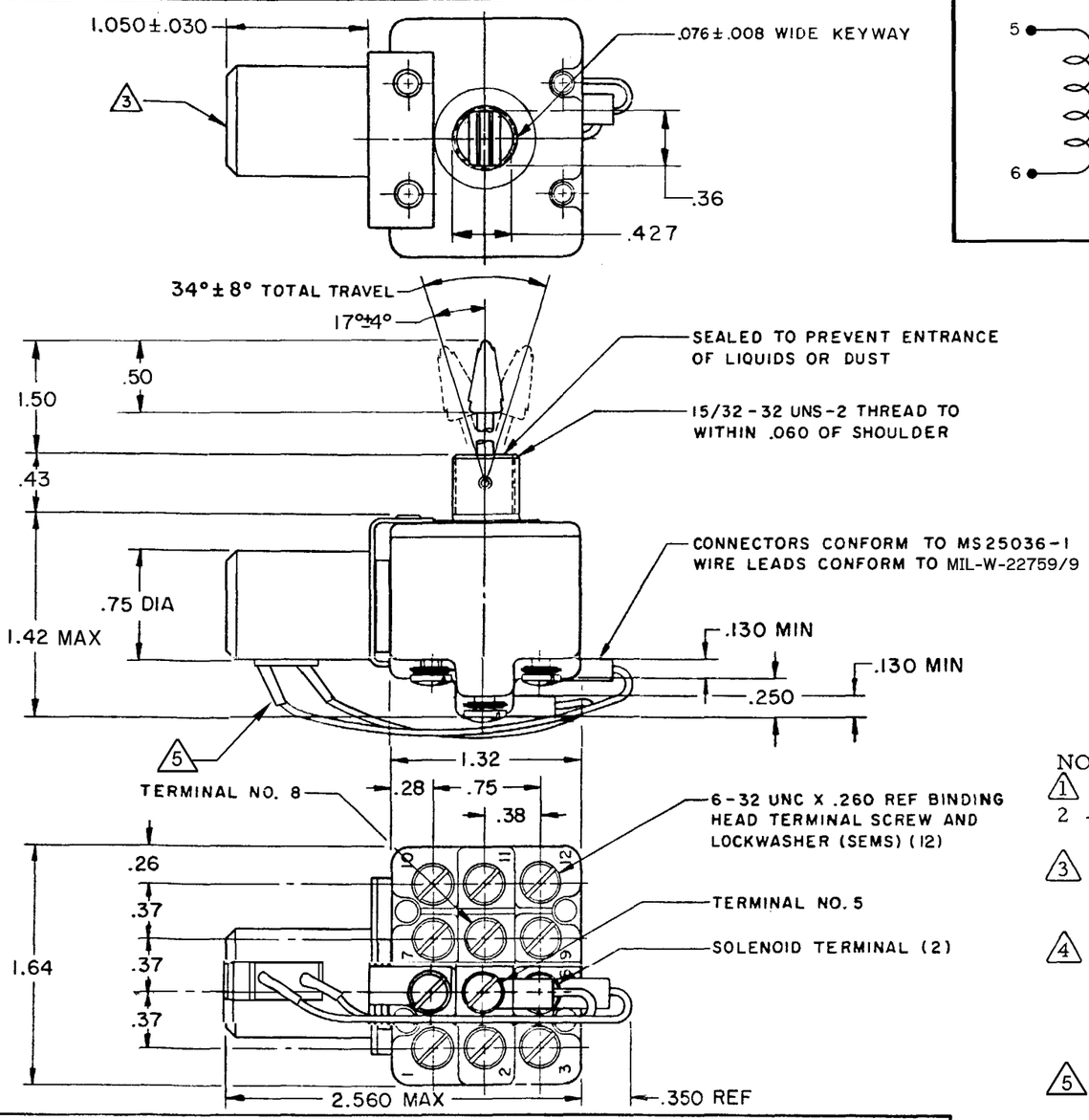

SOLENOID

CIRCUIT DIAGRAM

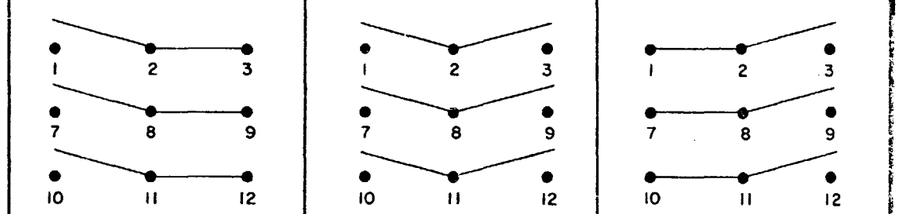

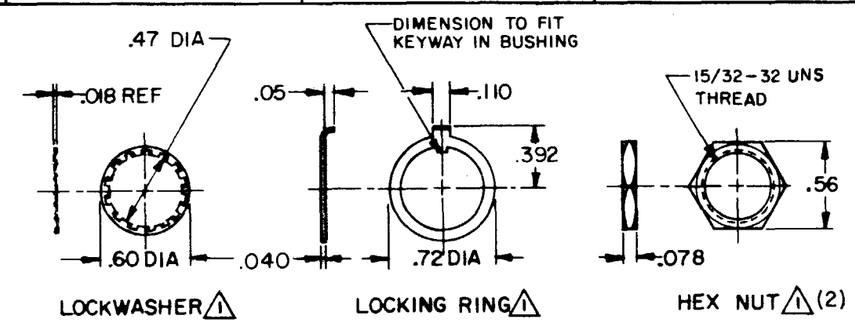

NOTES

1. FURNISHED UNASSEMBLED
2. SWITCH IS CAPABLE OF WITHSTANDING A TEMPERATURE OF 160°F CONTINUOUSLY AT FULL RATED LOAD
3. SOLENOID: 18-30 VDC, 2.5 WATTS MAX. DUTY CYCLE: CONTINUOUS AT 30 VDC, TEMPERATURE RISE APPROX 15°C ABOVE 20°C NON-POLARIZED
4. WHEN TOGGLE SWITCH IS MANUALLY ACTUATED TO MOMENTARY-ON POSITION WITH SOLENOID ENERGIZED, SWITCH WILL BE DE-TENTED IN THAT POSITION UNTIL SOLENOID IS DE-ENERGIZED. ELECTROMAGNETIC DETENT MAY BE MANUALLY OVERRIDDEN, DROPOUT VOLTAGE: 10VDC MAX
5. HEAT SHRINK TUBING PER AMS-DTL-23053/5, CLASS 1

THIS DRAWING COVERS A PROPRIETARY ITEM AND IS THE PROPERTY OF MICRO SWITCH, A DIVISION OF MINNEAPOLIS-HONEYWELL REGULATOR CO. THIS DRAWING IS NOT TO BE COPIED OR USED WITHOUT THE APPROVAL OF MICRO SWITCH.

ELECTRICAL DATA

CURRENT CAPACITY (AMPS)

CONTINUOUS	RESISTIVE LOAD DC VOLTS 30	115	250	AC VOLTS 115	230	LAMP LOAD 30 VDC	115 VAC	INDUCTIVE LOAD 30 VDC	115 VAC
	18	.75	.5	11	6	4	2	10	8

MECHANICAL LIFE---- 50,000 CYCLES
ELECTRICAL LIFE---- 20,000 CYCLES

SCALE FULL
DO NOT SCALE PRINT

UNLESS OTHERWISE NOTED
DIMENSIONS ARE IN INCHES
TOLERANCES ARE:

ONE PLACE	(.0)	±.030
TWO PLACE	(.00)	±.015
THREE PLACE	(.000)	±.005
ANGLES		±

WEIGHT 6 OZ MAX

L192 10A 125, 250, 277 VAC
1/4HP 125 VAC,
1/2HP 250, 277 VAC
3A 125 VAC "L"

DRAWING NUMBER 3TL55-7
PAGE 1 OF 1
ISSUE M 14
REPLACES
RELEASE NO. PR-3552-T
CHECK
REVISIONS
A CO-93999 J J A 7 JULY 99
B CO 94440 G R T 23 NOV 99
C 204873 C S L 15 FEB 02
17 DEC 98 J A F
CHECK
4 JUN 73 L E B
CHECK
1 JUN 73 S R H
DRAWN
RASTER
FO-50376-003